CX250D
CX250D Long Reach
Crawler Excavator

SERVICE MANUAL

Part number 47899898
English
June 2015
© 2015 CNH Industrial Italia S.p.A. All Rights Reserved.

CASE
CONSTRUCTION

SERVICE MANUAL

CX250D Crawler excavators LC version (TIER4 FINAL) - MEA Market
CX250D Long Reach Crawler excavators LC Long Reach (TIER4 FINAL) - MEA Market

Contents

INTRODUCTION

Engine..... 10

[10.001] Engine and crankcase 10.1

[10.102] Pan and covers 10.2

[10.106] Valve drive and gears 10.3

[10.101] Cylinder heads 10.4

[10.105] Connecting rods and pistons 10.5

[10.103] Crankshaft and flywheel 10.6

[10.216] Fuel tanks 10.7

[10.206] Fuel filters 10.8

[10.218] Fuel injection system 10.9

[10.202] Air cleaners and lines 10.10

[10.250] Turbocharger and lines 10.11

[10.254] Intake and exhaust manifolds and muffler 10.12

[10.500] Selective Catalytic Reduction (SCR) exhaust treatment 10.13

[10.501] Exhaust Gas Recirculation (EGR) - Diesel Particulate Filter (DPF) exhaust treatment 10.14

[10.400] Engine cooling system 10.15

[10.414] Fan and drive 10.16

[10.310] Aftercooler 10.17

[10.304] Engine lubrication system 10.18

Hydraulic systems..... 35

[35.000] Hydraulic systems 35.1

[35.300] Reservoir, cooler, and filters 35.2

[35.106] Variable displacement pump 35.3

[35.102] Pump control valves 35.4

[35.359] Main control valve 35.5

[35.357] Pilot system 35.6
[35.355] Hydraulic hand control 35.7
[35.356] Hydraulic foot control 35.8
[35.352] Hydraulic swing system 35.9
[35.353] Hydraulic travel system 35.10
[35.354] Hydraulic central joint 35.11
[35.736] Boom hydraulic system 35.12
[35.737] Dipper hydraulic system 35.13
[35.738] Excavator and backhoe bucket hydraulic system 35.14
[35.360] Hammer and rotating bucket hydraulic system 35.15

Frames and ballasting 39

[39.140] Ballasts and supports 39.1

Tracks and track suspension 48

[48.130] Track frame and driving wheels 48.1
[48.100] Tracks 48.2
[48.134] Track tension units 48.3
[48.138] Track rollers 48.4

Cab climate control 50

[50.100] Heating 50.1
[50.200] Air conditioning 50.2

Electrical systems 55

[55.000] Electrical system 55.1
[55.100] Harnesses and connectors 55.2
[55.525] Cab engine controls 55.3
[55.015] Engine control system 55.4
[55.201] Engine starting system 55.5
[55.301] Alternator 55.6
[55.302] Battery 55.7

Thanks very much for your reading,

Want to get more information,

Please click here, Then get the complete manual

JustClickHere

NOTE:

If there is no response to click on the link above, please download the PDF document first, and then click on it.

Have any questions please write to me:
admin@servicemanualperfect.com

[55.202] Cold start aid 55.8
[55.011] Fuel tank system 55.9
[55.010] Fuel injection system 55.10
[55.014] Engine intake and exhaust system 55.11
[55.988] Selective Catalytic Reduction (SCR) electrical system 55.12
[55.989] Exhaust Gas Recirculation (EGR) electrical system 55.13
[55.012] Engine cooling system 55.14
[55.013] Engine oil system 55.15
[55.640] Electronic modules 55.16
[55.512] Cab controls 55.17
[55.036] Hydraulic system control 55.18
[55.051] Cab Heating, Ventilation, and Air-Conditioning (HVAC) controls 55.19
[55.050] Heating, Ventilation, and Air-Conditioning (HVAC) control system 55.20
[55.524] Cab controls (Lift arm, Boom, Dipper, Bucket) 55.21
[55.416] Swing control system 55.22
[55.417] Travel control system 55.23
[55.530] Camera 55.24
[55.518] Wiper and washer system 55.25
[55.404] External lighting 55.26
[55.514] Cab lighting 55.27
[55.408] Warning indicators, alarms, and instruments 55.28
[55.992] Anti-theft system 55.29
[55.DTC] FAULT CODES 55.30

Booms, dippers, and buckets 84

[84.910] Boom 84.1
[84.912] Dipper arm 84.2
[84.100] Bucket 84.3

Platform, cab, bodywork, and decals 90

[90.150] Cab 90.1

[90.156] Cab glazing 90.2
[90.118] Protections and footboards..... 90.3
[90.120] Mechanically-adjusted operator seat..... 90.4
[90.100] Engine hood and panels 90.5

INTRODUCTION

Contents

INTRODUCTION

Foreword - Important notice regarding equipment servicing 3
Safety rules 4
Safety rules – General information 5
Safety rules – Personal safety 6
Safety rules – ROPS judgment 8
Torque – Bolt and nut 12
Torque - Special torque setting 13
Basic instructions - Shop and assembly 17
General specification (*) 19
General specification (*) 24
General specification - Main equipment 28
Weight (*) 37
Weight (*) 40
Dimension (*) 42
Dimension (*) 45
Conversion factors 46
Consumables 58
Capacities 61
Abbreviation 62
Product identification 65
Product identification - Machine orientation 68

(*) See content for specific models

Foreword - Important notice regarding equipment servicing

All repair and maintenance work listed in this manual must be carried out only by qualified dealership personnel, strictly complying with the instructions given, and using, whenever possible, the special tools.

Anyone who performs repair and maintenance operations without complying with the procedures provided herein shall be responsible for any subsequent damages.

The manufacturer and all the organizations of its distribution chain, including - without limitation - national, regional, or local dealers, reject any responsibility for damages caused by parts and/or components not approved by the manufacturer, including those used for the servicing or repair of the product manufactured or marketed by the manufacturer. In any case, no warranty is given or attributed on the product manufactured or marketed by the manufacturer in case of damages caused by parts and/or components not approved by the manufacturer.

The manufacturer reserves the right to make improvements in design and changes in specifications at any time without notice and without incurring any obligation to install them on units previously sold. Specifications, descriptions, and illustrative material herein are as accurate as known at time of publication but are subject to change without notice.

In case of questions, refer to your CASE CONSTRUCTION Sales and Service Networks.

Safety rules

Personal safety

This is the safety alert symbol. It is used to alert you to potential personal injury hazards. Obey all safety messages that follow this symbol to avoid possible death or injury.

Throughout this manual you will find the signal words DANGER, WARNING, and CAUTION followed by special instructions. These precautions are intended for the personal safety of you and those working with you.

Read and understand all the safety messages in this manual before you operate or service the machine.

⚠ DANGER indicates a hazardous situation that, if not avoided, will result in death or serious injury.

⚠ WARNING indicates a hazardous situation that, if not avoided, could result in death or serious injury.

⚠ CAUTION indicates a hazardous situation that, if not avoided, could result in minor or moderate injury.

FAILURE TO FOLLOW DANGER, WARNING, AND CAUTION MESSAGES COULD RESULT IN DEATH OR SERIOUS INJURY.

Machine safety

NOTICE: *Notice indicates a situation that, if not avoided, could result in machine or property damage.*

Throughout this manual you will find the signal word Notice followed by special instructions to prevent machine or property damage. The word Notice is used to address practices not related to personal safety.

Information

NOTE: *Note indicates additional information that clarifies steps, procedures, or other information in this manual.*

Throughout this manual you will find the word Note followed by additional information about a step, procedure, or other information in the manual. The word Note is not intended to address personal safety or property damage.

Safety rules – General information

Cleaning

Clean the metal parts with cleaning solution that meets the standard and steam cleaning. (except for bearings)

After cleaning, dry well, and inject oil in all parts.

Also inject oil into the bearings after drying.

Inspection

When disassembling parts, check all the parts.

If there are any worn or damaged parts, replace them.

Inspect carefully to prevent initial breakdowns.

Bearing

Replace any loose bearings.

Air dry bearings before installing them.

Needle bearing

When inserting needle bearings, be very careful not to damage them.

Apply grease to the section where the needle bearing will be inserted.

Gear

Check that there is no wear and no damage.

Oil seal, O-ring, gasket

Always install new oil seals, O-rings, and gaskets.

Apply grease to sections where oil seals and O-rings will be inserted.

Shaft

Check that there is no wear and no damage.

Check the bearings and check for damaged oil seals on the shaft.

Service parts

Install CASE CONSTRUCTION genuine service parts.

When placing an order, check the parts catalog. It contains the CASE CONSTRUCTION genuine part numbers.

Any breakdowns arising from the installation of non-genuine parts are not covered by the warranty.

Lubricants (fuel, hydraulic oil)

Use the oil from the specified company or specified in the operator's manual or service Manual.

Any breakdowns arising from any fuel or hydraulic oil other than those specified are not covered by the warranty.

Safety rules – Personal safety

WARNING:

This symbol indicates a precaution.

It gives information concerning the safety of the operator and those in the surroundings.

Read and understand these precautions thoroughly before performing the work.

Always comply with warnings and precautions so as to avoid any accidents.

This section covers information related to overall safety.

Check whether all warning labels are in place.

Additional labels can be ordered from Service Parts.

WARNING:

Read the operator's manual to gain a thorough understanding of machine control operations.

WARNING:

Perform any machine operations from the seating position.

Any other method may cause severe injuries.

WARNING:

Only the one operator is to ride on the machine. No one else is to ride on it.

WARNING:

Check the safety messages in the operator's manual before starting the engine.

Check all the warning labels on the machine.

Check that no one is within the machine’s operating range.

Check the operating methods in a safe location before starting the actual work.

Understand the machine operations well, then operate in compliance with all service-related laws and regulations.

The operator's manual can be purchased at your CASE CONSTRUCTION dealer.

WARNING:

Working with sloppy clothes or clothes with which safety cannot be ensured leads to damage to the machine and injury to the operator.

Always wear clothes that ensures safety.

In order to work more safely, it is recommended to wear additional safety equipment.

Helmet, safety shoes, ear protection, goggles, work clothes, and gloves

WARNING:

Pay careful attention when working with the engine running.

WARNING:

Check hydraulic equipment.

Work according to the procedure.

Do not change the procedure.

WARNING:

Check that there is no one in the surroundings before draining the pressure from hydraulic circuits during machine hydraulic cylinder inspection.

WARNING:

Use gloves when handling high-temperature parts.

WARNING:

Bring the lower parts or attachments in contact with the ground before inspecting or repairing them.

WARNING:

Check that hoses and tubes are securely connected.

If there is any damage to a hose or tube, replace it.

Do not check for oil leaks by hand. Use cardboard or wood.

WARNING:

When removing an attachment pin or other hardened pin, use a hammer that has a soft head.

WARNING:

Wear eye protection when using a hammer to install a pin or when working with a grinder.

At this time, use goggles or eye protectors that meet standards.

WARNING:

Park the machine in a safe location when repairing or inspecting it.

WARNING:

Use work site protection when repairing the machine.

Check the oil, coolant, grease, and tools.

Recover materials and parts as necessary.

Pay enough attention to safety.

WARNING:

Some of the machine's parts are extremely heavy.

Use an appropriate lifting equipment for such parts.

For weights and procedures, see the Service Manual.

WARNING:

Exhaust gases are toxic.

Always provide good ventilation when working indoors or in any other enclosed space.

WARNING:

If the electrolytic battery solution freezes, it may explode.

Safety rules – ROPS judgment

1. Purpose

Judge whether or not the model is compliant with ROPS by the ROPS criteria.

Compliance with ROPS is highly dependent on its deadweight and boom.

The model has passed the ROPS test for its deadweight with all selectable options installed (as of 2014).

However, the judgment is required because its deadweight or boom position may go beyond the assumption depending on derivative or order conditions.

2. ROPS criteria

Weight

For each class, the following weight shall not be exceeded.

If the weight is exceeded, a cab may become damaged in case of a rollover, causing the operator to die or become severely disabled.

It is not applicable beyond the criterion.

The ROPS-compliant model shall not exceed the weight shown in the table.

(The following weight is shown on the decal in the ROPS cab.)

Gross body weight	Class
20500 kg (**45194.76 lb**) or less	CX130D
	CX160D
	CX180D
32000 kg (**70547.92 lb**) or less	CX210D
	CX250D
	CX300D
40000 kg (**88184.90 lb**) or less	CX350D
	CX370D

Boom position

Warning

- If you make such modification as lowers the boom position, ROPS is not applicable.
- Consultation with us is required whenever it is assumed that the boom position is lowered by modification.
- The range of change in the boom position cannot be determined uniformly.

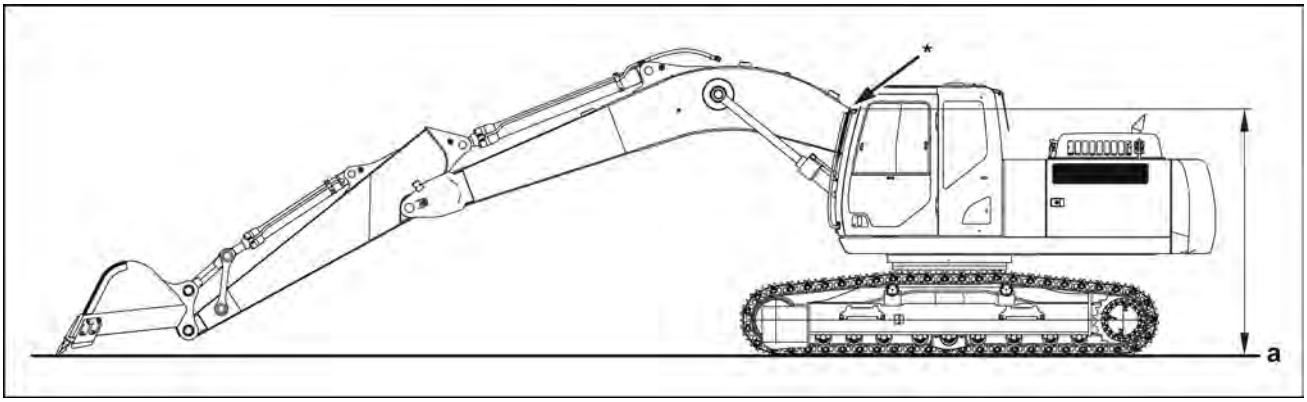

SMIL14CEX2001EA 1

(a) Ground point

It is not applicable if the position overlapping with a cab on the side view (mark * in the figure) is lowered significantly as compared with the standard model (standard arm), within the maximum digging radius with the bucket tip on the surface of the ground.

Moreover, it cannot be said that the 24-ton model, close to the limit weight, with a cab that can bear up to 31-tons and the 21-ton model with the same cab are the same in the degree of influence.

3. Prohibitions

- Such modification as reduces the strength of the platform where the ROPS cab is installed. (Such action or modification as reduces the function of the retaining anchor in the left rear of the cab)
- Such modification as affects the ROPS strength of the ROPS cab.

Modification prohibited (Red components)	All changes (grinding, welding, drilling, removal, etc.) are prohibited.
Conditional modification permitted (Gray components)	Removal of components is prohibited. Welding and drilling of bars (limited to **20 mm** (**0.79 in**) or less in diameter) are allowed.

Cab (CX130D/CX160D/CX180D)

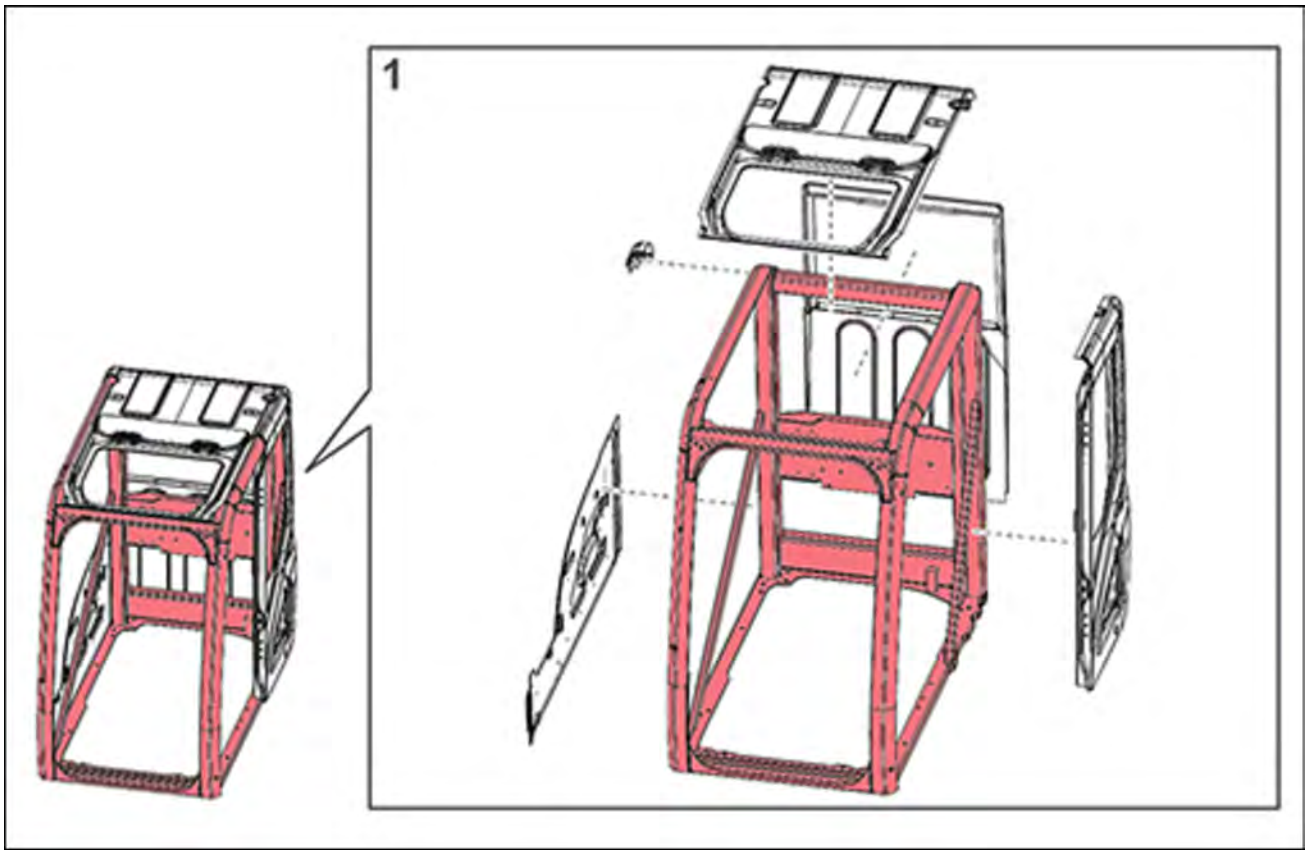

SMPH15CEX5805FA 2

Cab (CX210D/CX250D/CX300D)

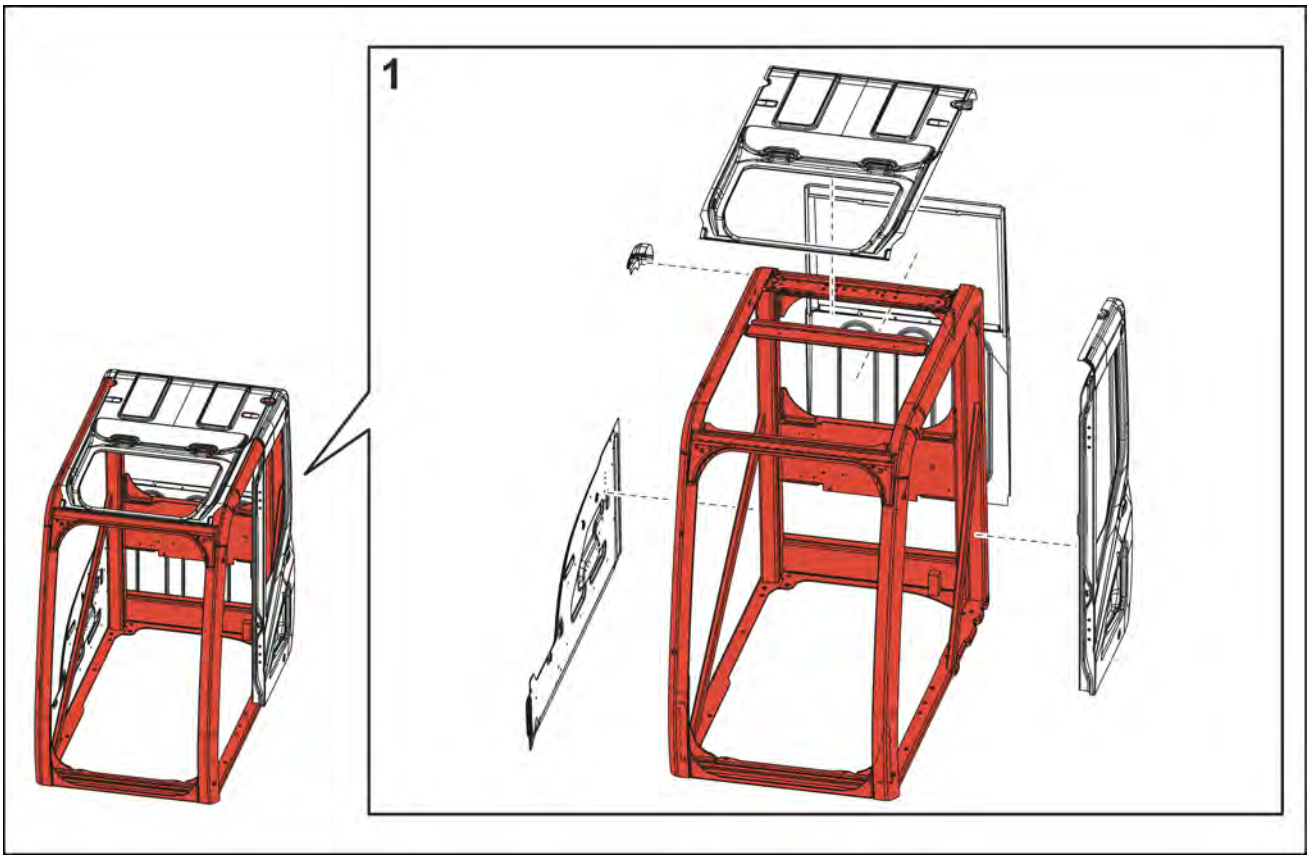

SMIL14CEX2002FA 3

Cab (CX350D/CX370D)

The large-sized model (CX350D/CX370D) cab consists of the medium-sized model (CX210D/CX250D/CX300D) cab in the figure plus seven reinforcements.

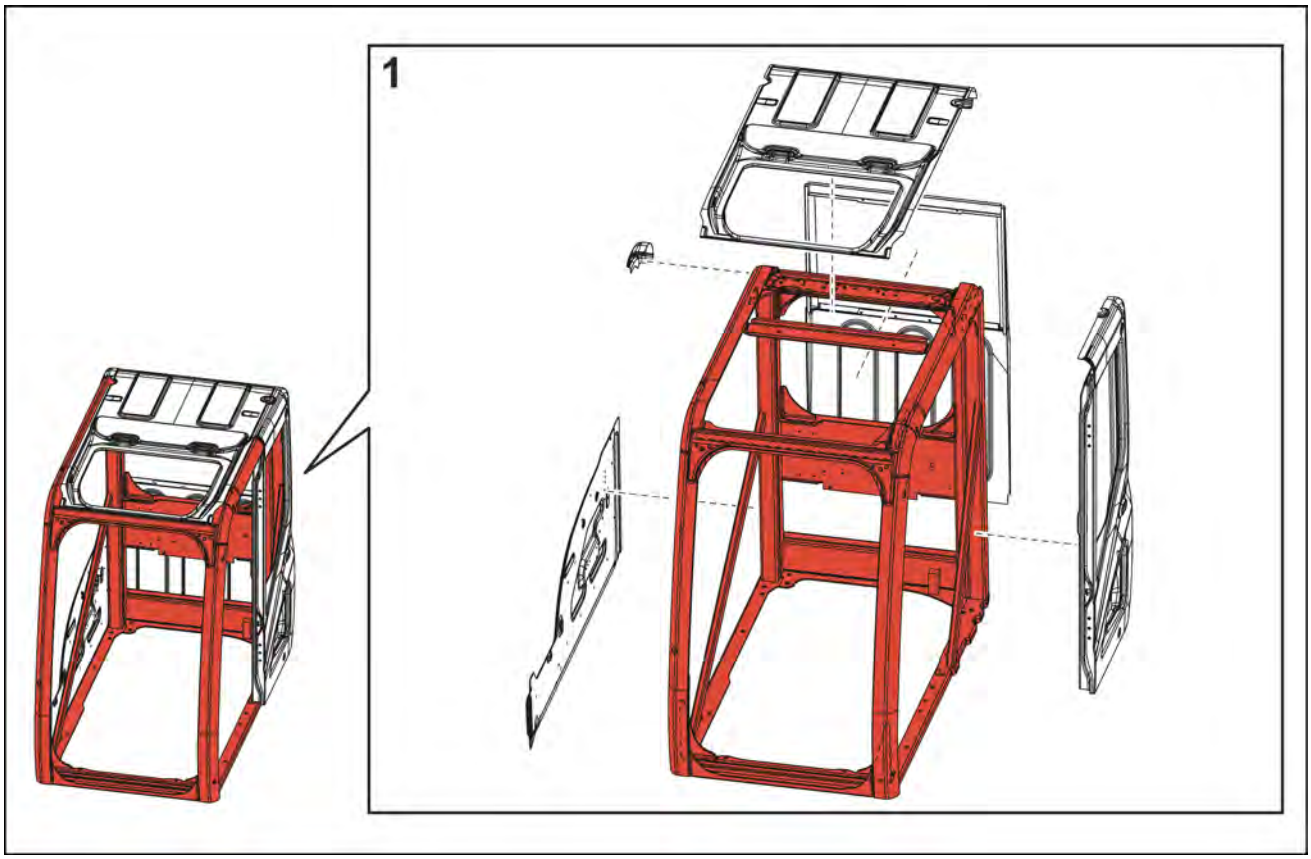

SMIL14CEX2003FA 4

The high cab is not supported basically. (Since it varies for each model, consultation with us is required in each case.)

Torque – Bolt and nut

- Tighten alternating between left and right and top and bottom so that uniform tightening force is applied.

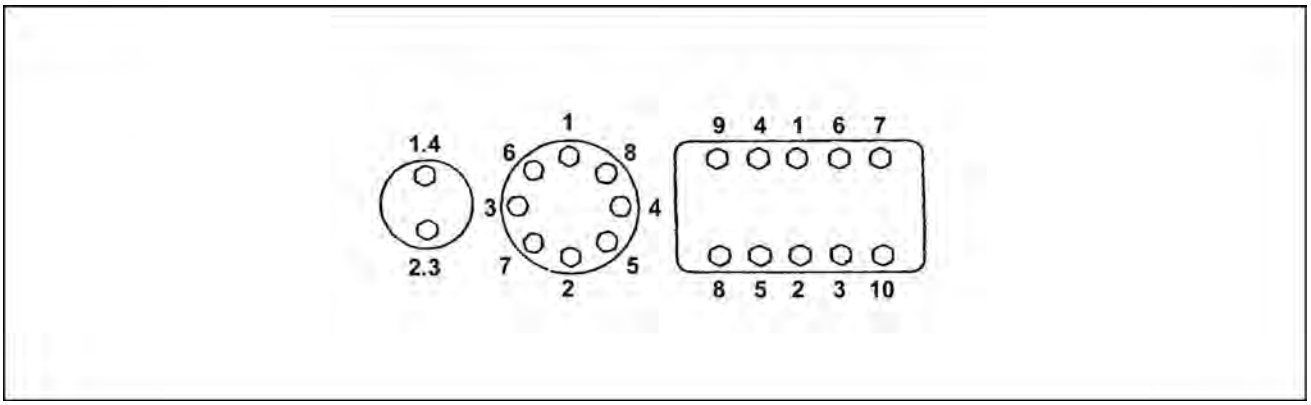

LPIL12CX00005EA 1

- If **LOCTITE®** was used on a removed bolt (there is something white sticking to the bolt when it is removed), clean the old **LOCTITE®** off with cleaning fluid, dry the bolt, then apply 2 - 3 drops of **LOCTITE®** to the thread section of the bolt.

Torque table

Bolt nominal diameter (size)		M6	M8	M10	M12	M14	M16	M18	M20
Hexagon bolt	Wrench	**10 mm**	**13 mm**	**17 mm**	**19 mm**	**22 mm**	**24 mm**	**27 mm**	**30 mm**
	Tightening torque	**6.9 N·m (5.089 lb ft)**	**19.6 N·m (14.456 lb ft)**	**39.2 N·m (28.912 lb ft)**	**58.8 N·m (43.369 lb ft)**	**98.1 N·m (72.355 lb ft)**	**156.9 N·m (115.723 lb ft)**	**196.1 N·m (144.636 lb ft)**	**294.2 N·m (216.991 lb ft)**
Hexagon socket head bolt	Wrench	**5 mm**	**6 mm**	**8 mm**	**10 mm**	**12 mm**	**14 mm**	**14 mm**	**17 mm**
	Tightening torque	**8.8 N·m (6.491 lb ft)**	**21.6 N·m (15.931 lb ft)**	**42.1 N·m (31.051 lb ft)**	**78.5 N·m (57.899 lb ft)**	**117.7 N·m (86.811 lb ft)**	**176.5 N·m (130.180 lb ft)**	**245.2 N·m (180.850 lb ft)**	**343.2 N·m (253.131 lb ft)**

Torque - Special torque setting

Code	Retightening location		Bolt nominal diameter	Wrench	Tightening torque
1*	Travel motor		**M16**	**24 mm**	**267 - 312 N·m (196.93 - 230.12 lb ft)**
2*	Drive sprocket		**M16**	**24 mm**	**267 - 312 N·m (196.93 - 230.12 lb ft)**
3*	Take-up roller		**M16**	**24 mm**	**267 - 312 N·m (196.93 - 230.12 lb ft)**
4*	Upper roller		**M20**	**30 mm**	**521 - 608 N·m (384.27 - 448.44 lb ft)**
5*	Lower roller		**M18**	**27 mm**	**371 - 432 N·m (273.64 - 318.63 lb ft)**
6*	Track guard		**M18**	**27 mm**	**400 - 462 N·m (295.02 - 340.75 lb ft)**
7	Shoe		**M20**	**30 mm**	**250 - 350 N·m (184.39 - 258.15 lb ft)**
8	Counterweight		**M33**	**50 mm**	**1950 - 2156 N·m (1438.25 - 1590.18 lb ft)**
9*	Turntable bearing		**M24**	**36 mm**	**784 - 914 N·m (578.25 - 674.13 lb ft)**
10*	Swing unit		**M24**	**36 mm**	**784 - 914 N·m (578.25 - 674.13 lb ft)**
11*	Engine	Mount	**M16**	**24 mm**	**264.9 - 313.9 N·m (195.38 - 231.52 lb ft)**
12*		Front bracket	**M10**	**17 mm**	**63.8 - 73.6 N·m (47.06 - 54.28 lb ft)**
13*		Rear bracket	**M16**	**24 mm**	**205.9 - 247.1 N·m (151.86 - 182.25 lb ft)**
14*	Radiator		**M16**	**24 mm**	**147.2 - 176.6 N·m (108.57 - 130.25 lb ft)**
15*	Hydraulic pump	Pump	**M20**	**17 mm** hexagon socket head	**367 - 496 N·m (270.69 - 365.83 lb ft)**
16*	Hydraulic oil tank		**M16**	**24 mm**	**232.4 - 276 N·m (171.41 - 203.57 lb ft)**
17*	Fuel tank		**M16**	**24 mm**	**232.4 - 276 N·m (171.41 - 203.57 lb ft)**
18*	Control valve		**M16**	**24 mm**	**267 - 312 N·m (196.93 - 230.12 lb ft)**
19*	Center Joint	Lock bar	**M12**	**19 mm**	**88.3 - 107 N·m (65.13 - 78.92 lb ft)**
20*		Joint	**M12**	**19 mm**	**109 - 127 N·m (80.39 - 93.67 lb ft)**
21	Cab		**M16**	**24 mm**	**149 - 173 N·m (109.90 - 127.60 lb ft)**
22	Battery		**M10**	**17 mm**	**19.6 - 29.4 N·m (14.46 - 21.68 lb ft)**

⚠ CAUTION:

- Make sure to apply **LOCTITE® 262™** or equivalent to the locations with the * mark, and tighten according to the specified torque.
- Tightening torque: N· m÷9.8 = kgf· m

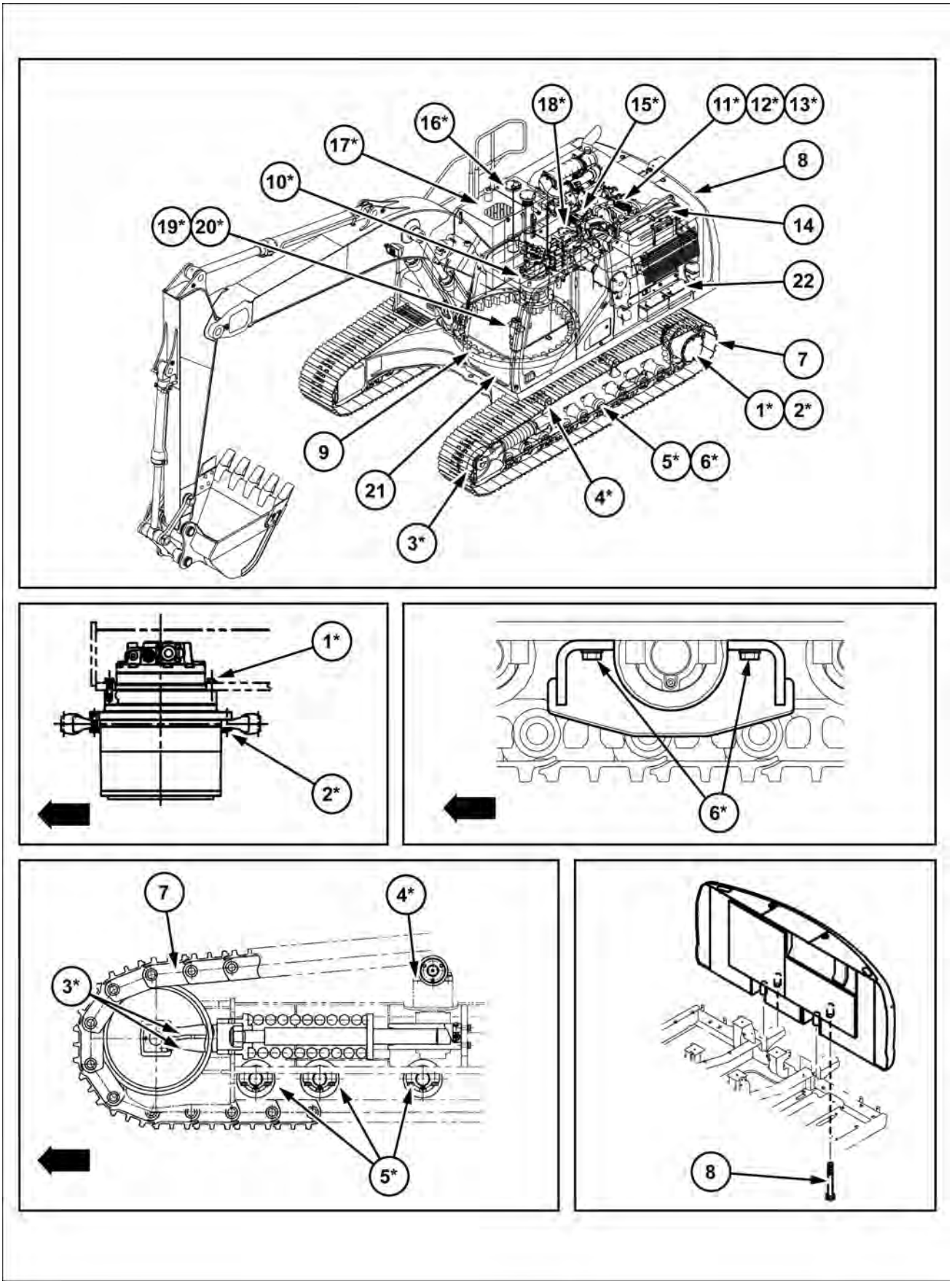

SMIL14CEX6655HB 1